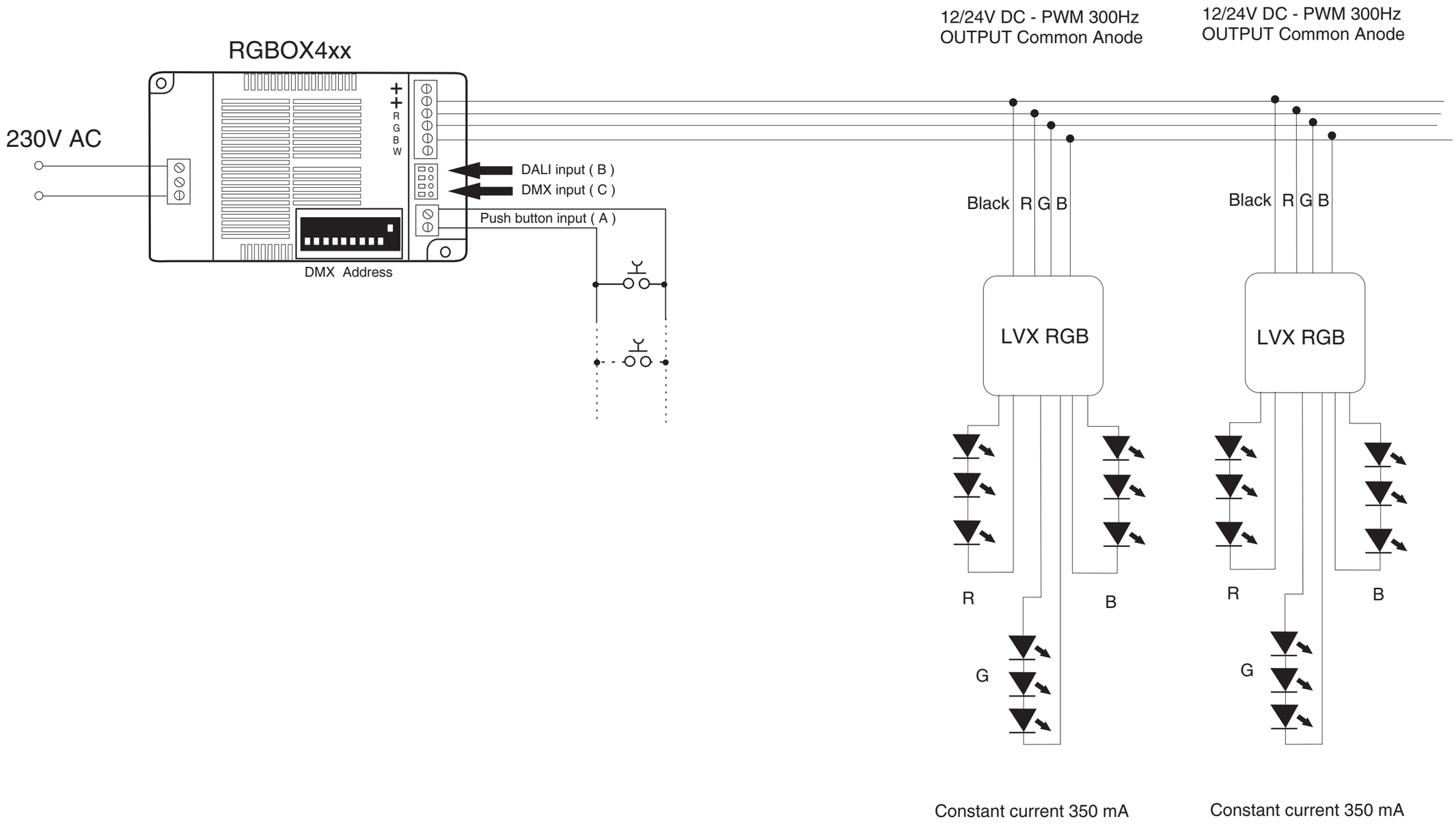
RGBOX4xx
230V AC
R
G
B
W
DALI input (B)
DMX input (C)
Push button input (A)
DMX Address
12/24V DC - PWM 300Hz
OUTPUT Common Anode
12/24V DC - PWM 300Hz
OUTPUT Common Anode
Black R G B
Black R G B
LVX RGB
LVX RGB
R
B
G
R
B
G
Constant current 350 mA
Constant current 350 mA

Mod.288-1